ALP-65

SURFACE MOUNT LED PROFILE WITH OPTIC OPTIONS

UPDATED: 11.05.26

Project _____

Location _____

Quote/ Ref # _____

The **ALP-65** is an Architectural Grade LED extrusion profile designed for linear LED strips up to 10mm (.4") wide. Made from high quality Aluminum, these extrusions provide superior thermal management for higher wattage LED strips and prolong the lifespan of your lighting system. This surface mount profile is manufactured with a patented semi-frosted diffuser for maximum lumen output and wide beam distribution. The installed LED strip can be raised or lowered to adjust beam the beam angle.



SPECIFICATIONS

TYPE	Surface Mount
LED STRIP	Fits LED strips up to 10mm (0.4 in)
LENGTHS	49"/ 84" / 96"
FINISH	Silver
LENS	Semi-Frosted (Included)
CHANNEL	ALP-65
LENS	ALP65-FR (Semi-Frosted) ALP65-CLR (Clear)
END CAP	ALP65-EC
MOUNTING CLIPS	ALP65-CL

FEATURES

- Fits LED strips up to 10mm (0.4 in) wide
- Semi-Frosted lens included with each profile
- Field Cuttable
- Durable, anodized aluminum
- Dissipates heat from LED, prolonging its lifetime

INDOOR OUTDOOR DIMMABLE FIELD CUTTABLE 5 YEAR WARRANTY

MODEL	LENGTH	LENS	OPTICS	FINISH
ALP-65	**49** 49 In.	**FR** Semi-Frosted	**10** 10°	**SI** Silver
	84 84 In.	**CLR** Clear	**30** 30°	**CC** Custom Color
	96 96 In.		**60** 60°	
	XX Custom Length			

* Custom color finishes require powder coating. Allow 4 weeks lead time.

ALP-65

UPDATED: 11.05.26

SURFACE MOUNT LED PROFILE WITH OPTIC OPTIONS

DIMENSIONS

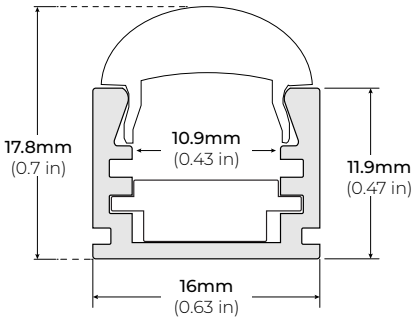

ASSEMBLY

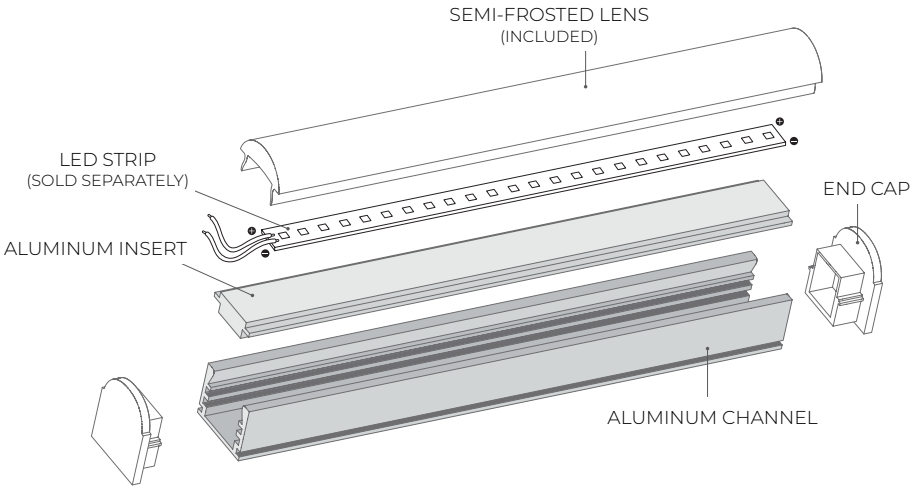

OPTICS

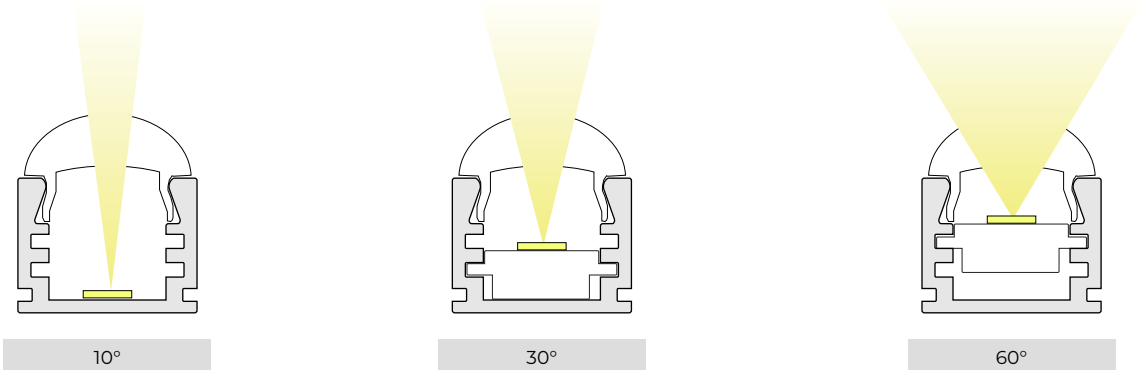

ALP-65

UPDATED: 11.05.26

SURFACE MOUNT LED PROFILE WITH OPTIC OPTIONS

ACCESSORIES

ALP65-EC
END CAP

* Included

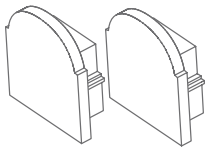

ALP65-CL
MOUNTING CLIP
10mm x 15.8mm x 11mm (L x W x H)

* Set of 2, Included

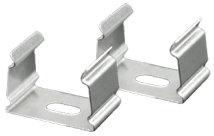

ALP65-BKT-ADJ
ADJUSTABLE MOUNTING BRACKET

* Sold Separately

