ALP-100C

SURFACE MOUNT LED PROFILE

UPDATED: 10.04.26

Project _____

Location _____

Quote/ Ref # _____

The **ALP-100C** is an architectural grade LED extrusion designed for linear LED strips up to 20mm (0.79") wide. Made from high quality aluminum, these extrusions provide superior thermal management for highter wattage LED strips and prolong the lifespan of your lighting system. This surface mount profile is manufactured with a patented frosted diffuser for maximum lumen output and wider beam distribution.



SPECIFICATIONS

TYPE	Surface / Corner Mount
LED STRIP	Fits LED strips up to 20mm (0.79 in)
LENGTHS	49.25" / 98.5"
FINISH	Silver
LENS OPTIONS	Frosted
CHANNEL	ALP100C
LENS	ALP100C-LN (included)
END CAP	ALP100C-EC
MOUNTING CLIPS	ALP100C-CL

* LED strips sold separately

FEATURES

- Customizable
- Compatible with LED strips up to 20mm (0.79 in) wide
- Durable, military grade aluminum
- Suitable for surface / corner mount applications
- Protects LED systems from dust and other elements
- Dissipates heat from LED, prolonging its lifetime

INDOOR OUTDOOR FIELD CUTTABLE 5 YEAR WARRANTY

MODEL	LENGTH	LENS	FINISH
ALP100C	**49** 49.25 In. **98** 98.5 In. **PF** Per Ft.	**FR** Frosted	**SI** Silver **CU** Custom (Powder Coat)

* Custom color finishes require powder coating. Allow 7 days lead time.

ALP-100C

SURFACE MOUNT LED PROFILE

UPDATED: 10.04.26

DIMENSIONS

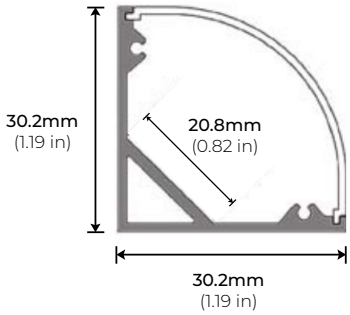

ACCESSORIES

ALP100C-EC
END CAP
*2 end caps included with every profile

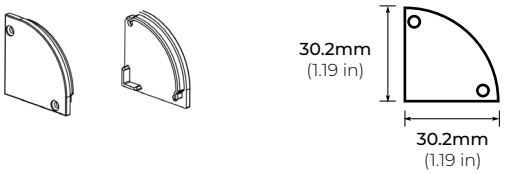

ALP100C-CL
METAL MOUNTING CLIPS
*2 mounting clips included with every profile

