LSM-25FX 2.2 W indoor Bendable LED Strip

CORE ARCHITECTURAL LIGHTING

SPECIFICATION SHEET

JOB NAME: _____
LOCATION: _____
QUOTE/REF#: _____

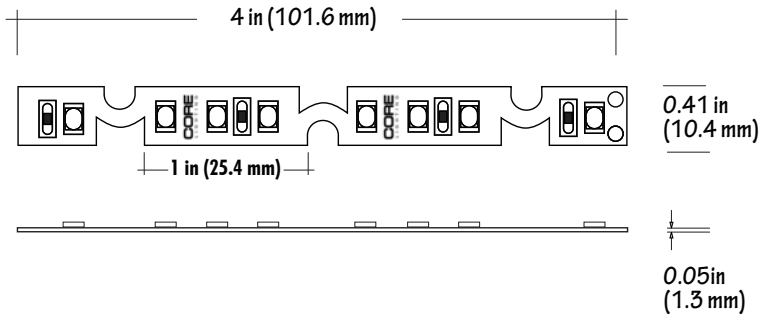

LSM-25FX series is a bendable LED strip offered in a low profile design. At 2.2 watts per foot, this LED strip delivers 185 Lumens, dimmable and field cuttable. Suitable for cove lighting, display cases, under cabinets and signage. Rated to last 50,000 hrs, this indoor LED strip is ideal for most residential and commercial application.

SPECIFICATIONS

INPUT VOLTAGE	24V DC
POWER CONSUMPTION	2.2W per foot
LUMEN OUTPUT	185 Lumens per foot
NO. OF LEDs	27 LEDs per foot
BEAM ANGLE	120º
CRI	90+
DIMMING	MLV, ELV, 0-10 and TRIAC
MAXIMUM RUN LENGTH	30 Feet
FIELD CUTTABLE	Every 4 in
IP RATING	IP45 dry location (indoor)
LUMEN MAINTENANCE	50,000 hrs.
OPERATING TEMPERATURE	-40ºF(-40ºC)~+140ºF(+60ºC)
BINNING	1.5 Step Macadam Elipse
CERTIFICATIONS	UL listed, TITLE 24 JA8
DIMENSIONS	0.4" x 0.08 (width x height)

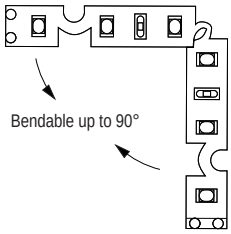

FEATURES

- 2.2W per Foot
- 185 Lumens
- 95+ CRI
- California TITLE 24 JA8 compliant
- Field cuttable
- Suitable for accent or ambient lighting
- Multiple CCT options available
- Superior COLOR RENDERING INDEX (CRI)
- Available in 24V
- UL Listed
- Dimmable with CORE Lighting dimmable drivers

COLOR TEMP	CRI	LUMEN/FT
2700K	94	176
3000K	94	178
3500K	94	180
4000K	94	182
5000K	96	184
6000K	97	185

2.2W PER FT. | 185 LUMENS | 95+ CRI | INDOOR | FIELD CUTTABLE | 50,000 HOURS | DIMMABLE

c UL us LISTED | JA8 TITLE 24 | WARRANTY 5 YEAR WARRANTY

15024 Staff Ct., Gardena CA, 90248
info@corelightingusa.com | www.corelightingusa.com
T: 888.737.9192 | F: 888.789.4643

STANDARD ORDERING CODE

Model	Color Temp	Length	Voltage
LSM-25FX	**27K** - 2700K **30K** - 3000K **35K** - 3500K **40K** - 4000K **50K** - 5000K **60K** - 6000K	**16** - 16.4 Ft. **100** - 100 Ft. **PF** - Per foot	**24V** - 24V DC

CUSTOMIZED LENGTH ORDERING CODE

Model	Color Temp	Length	Voltage	Profile
LSM-25FX	**27K** - 2700K **30K** - 3000K **35K** - 3500K **40K** - 4000K **50K** - 5000K **60K** - 6000K	**XX** - Custom Length	**24V** - 24V DC	**See pp3-4 for options**

15024 Staff Ct., Gardena CA, 90248
info@corelightingusa.com | www.corelightingusa.com
T: 888.737.9192 | F: 888.789.4643

COMPATIBLE TRANSFORMERS

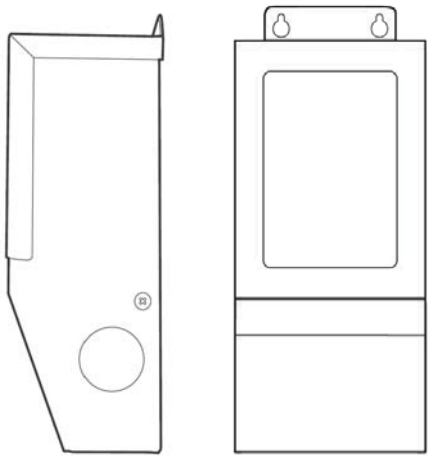

PSDM SERIES DIMMABLE MAGNETIC LOW VOLTAGE (MLV)

PSDM-20W-24V	CLASS 2	5.6″ x 2″ x 2.14″
PSDM-40W-24V	CLASS 2	5.6″ x 2″ x 2.14″
PSDM-60W-24V	CLASS 2	6.5″ x 2.3″ x 2.5″
PSDM-100W-24V	CLASS 2	6.5″ x 2.3″ x 2.5″
PSDM-150W-24V		9.8″ x 3″ x 3″
PSDM-192W-24V	CLASS 2	7.0″ x 7.0″ x 3.2″
PSDM-200W-24V		9.8″ x 3″ x 3″
PSDM-288W-24V	CLASS 2	9.8″ x 4.2″ x 3.5″
PSDM-300W-24V		7.0″ x 7.0″ x 3.2″

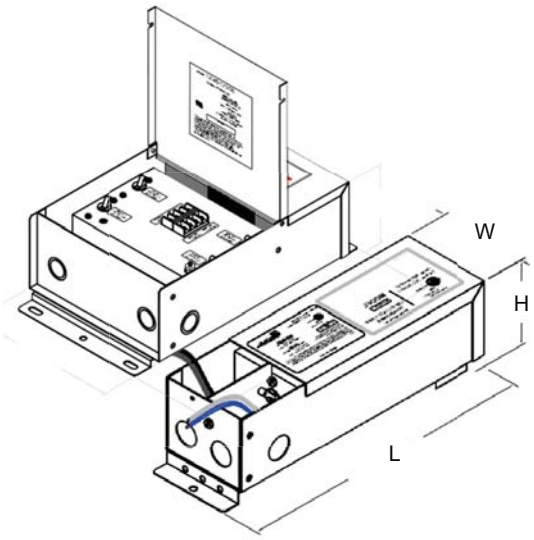

PSDH SERIES HIGH PERFORMANCE MLV

PSDH-48W-24V	CLASS 2	11.25″x 3.37″x 3.25″
PSDH-96W-24V	CLASS 2	11.25″x 3.37″x 3.25″
PSDH-288W-24V	CLASS 2	14.25″x 8.43″x 4.43″

15024 Staff Ct., Gardena CA, 90248
info@corelightingusa.com | www.corelightingusa.com
T: 888.737.9192 | F: 888.789.4643

COMPATIBLE TRANSFORMERS

PSDL SERIES TRIAC DIMMABLE

PSDL-30W-24V	CLASS 2	6.5″x 3.63″x 1.03″
PSDL-60W-24V	CLASS 2	7.4″x 3.63″x 1.03″
PSDL-96W-24V	CLASS 2	8.67″x 3.67″x 1.62″
PSDL-150W-24V		8.67″x 3.67″x 1.62″
PSDL-192W-24V		10.25″x 4.06″x 1.82″
PSDL-200W-24V		10.25″x 4.06″x 1.82″
PSDL-288W-24V		10.25″x 4.06″x 1.82″
PSDL-300W-24V		10.25″x 4.06″x 1.82″

PSHK SERIES NON-DIMMING WITH JUNCTION BOX

PSHK-30W-24V-UNV	CLASS 2	6.5″ X 3.6″ X 1.02″
PSHK-60W-24V-UNV	CLASS 2	7.4″ X 3.62″ X 1.02″
PSHK-96W-24V-UNV	CLASS 2	8.66″ X 3.66″ X 1.61″
PSHK-150W-24V-UNV		10.24″ X 4.06″ X 1.81″
PSHK-200W-24V-UNV		10.24″ X 4.06″ X 1.81″
PSHK-300W-24V-UNV		10.94″ X 4.25″ X 1.81″

15024 Staff Ct., Gardena CA, 90248
info@corelightingusa.com | www.corelightingusa.com
T: 888.737.9192 | F: 888.789.4643

COMPATIBLE TRANSFORMERS

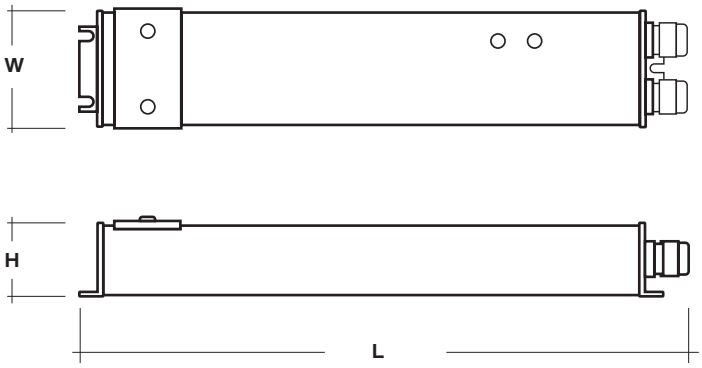

PSDE SERIES 0-10V DIMMING WITH JUNCTION BOX

PSDE-100W-24V-010-JB	CLASS 2	12.32″ x 1.77″ x 1.67″

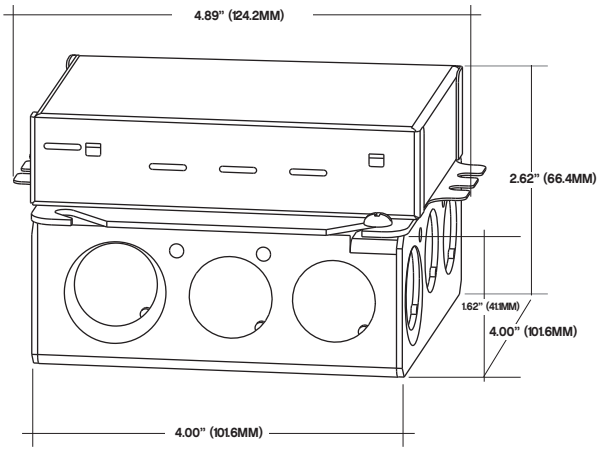

LUTRON 1% 2 OR 3-WIRE DIMMING

LTEA4U1UKL-CV240	CLASS 2	4.0″ x 1.5″ x 4.0″
L3DA4U1UKL-CV240	CLASS 2	4.0″ x 1.5″ x 4.0″

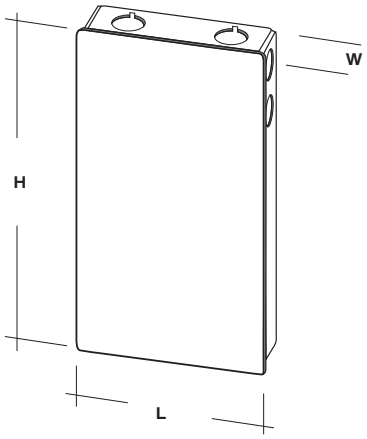

LUTRON 1%

PSDE-96W-24V-ECO	CLASS 2	10.5″ x 3.0″ x 2.0″

15024 Staff Ct., Gardena CA, 90248
info@corelightingusa.com | www.corelightingusa.com
T: 888.737.9192 | F: 888.789.4643